IF IN DOUBT, ASK.

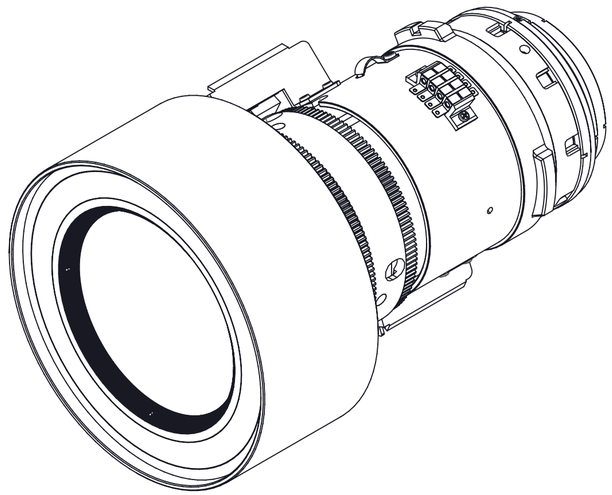

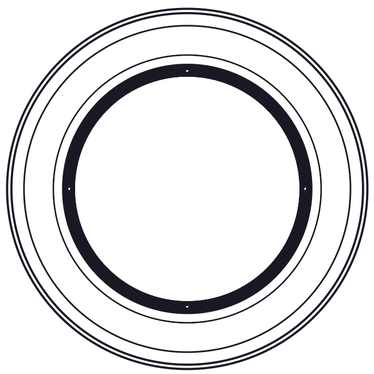

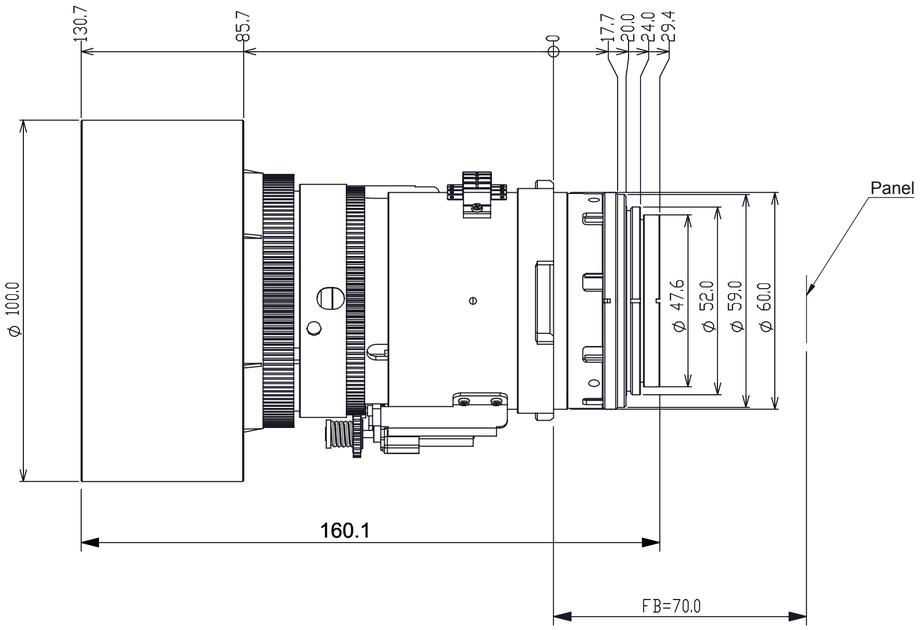

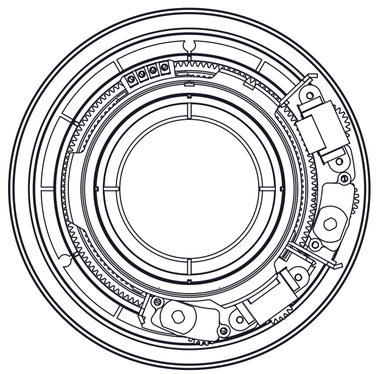

THROW RATIO	
WUXGA	UHD 4K
2.22-3.67:1	2.2-3.67:1

A2 DRG. No.

PROPRIETARY INFORMATION

This document contains proprietary information which is forwarded to you in confidence for a specific purpose. It shall not be reproduced nor transferred to other documents nor disclosed to others nor used for any other purpose without the prior written permission of Digital Projection Ltd. It shall be returned immediately upon request.

DRAWN BS 308

3rd Angle Projection

Distribution Code

PRE REVS	ITEM	DESCRIPTION	REFER TO	No OFF	REMARKS
	7				
	6				
	5				
	4				
	3				
	2				
A	1				

MATERIAL

CODE

FINISH

CAD GENERATED DRAWING
DO NOT MAKE MANUAL CHANGES

LAST CHANGE

DATE OF ISSUE 1-3-19

TOLERANCES UNLESS OTHERWISE STATED

METRIC: 1.000 = ±0.01
1.00 = ±0.1
1.0 = ±0.2
1 = ±0.4

IMPERIAL Fractional ±1/64"
Decimal ± 0.005"

ANGLES ± 0° 30'

Unless Otherwise Stated DIMENSIONS IN MILLIMETRES

REMOVE ALL BURRS & SHARP EDGES. DO NOT SCALE DRAWING
THE SURFACE TEXTURE ROUGHNESS NUMBER OF MACHINED SURFACES SHOULD BE EQUAL TO OR LESS THAN 0.8um (N6 CLA32)

REV.	A
NOTE	
DRAWN	jcharnley
APP.DO.	
DATE	30-11-17

FIRST USED ON

ORIGINAL SCALE 1:1.2

DRAWN jcharnley

APP.ENG.

DATE 23-11-17

DIGITAL PROJECTION

MIDDLETON M24 1XX

TITLE

LENS, H6 SLZM, F1.86-2.48

COMPONENT OR DRG.No.

112-502

A2:SHEET 1 OF 1