IF IN DOUBT, ASK.

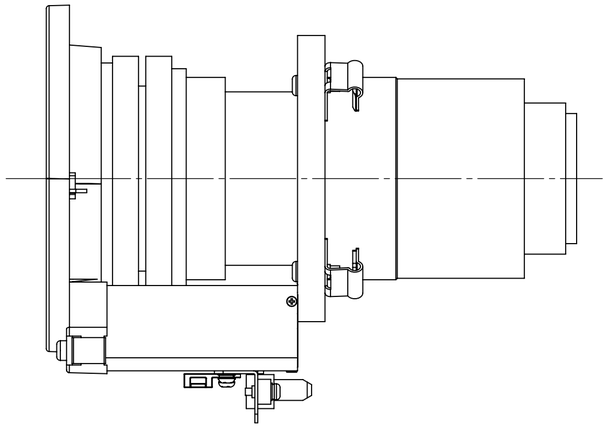

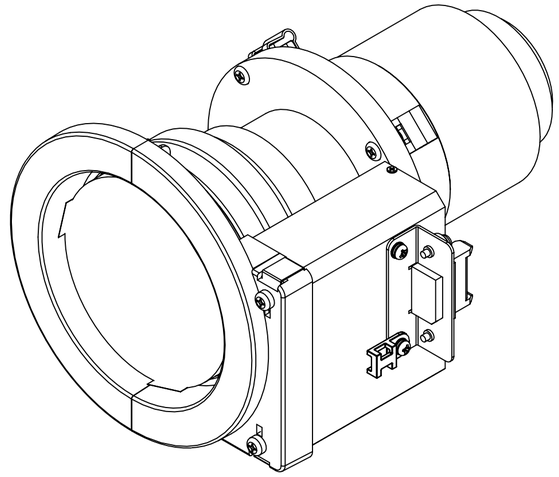

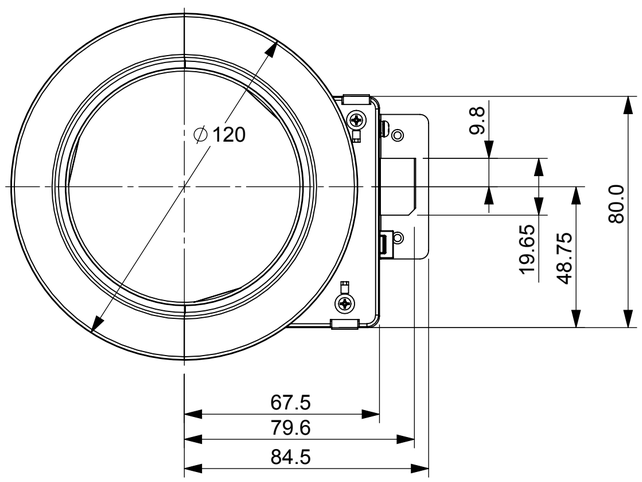

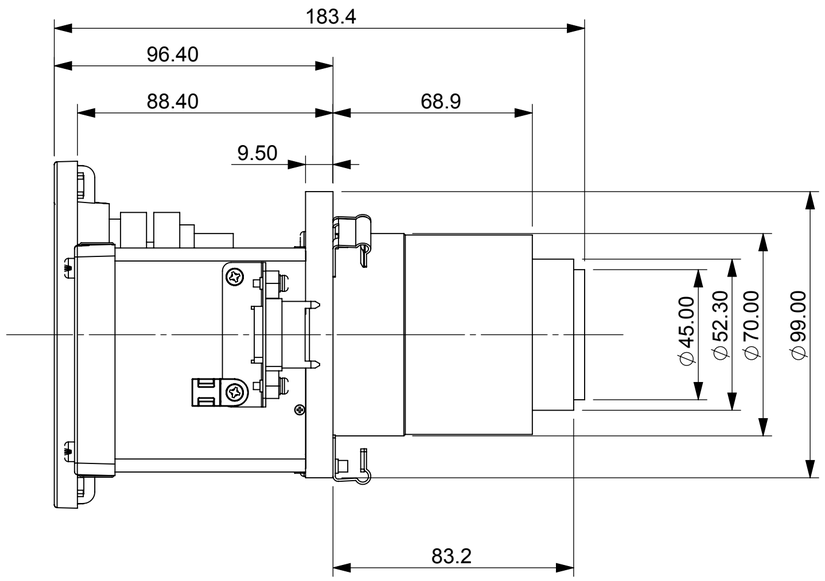

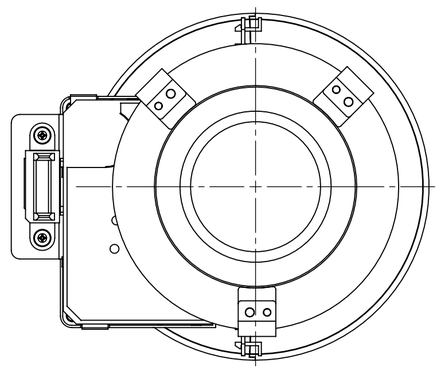

PROPRIETARY INFORMATION
This document contains proprietary information which is forwarded to you in confidence for a specific purpose.It shall not be reproduced nor transferred to other documents nor disclosed verbally or in writing to any other party nor used for any other purpose without the prior written permission of Digital Projection Ltd. It shall be returned immediately upon request.

A2 DRG. No.

DRAWN BS 308
3rd Angle Projection

Distribution Code

PRE REVS	ITEM	DESCRIPTION	REFER TO	No OFF	REMARKS
	7				
	6				
	5				
	4				
	3				
	2				
A	1				

MATERIAL

CODE

FINISH

CAD GENERATED DRAWING
DO NOT MAKE MANUAL CHANGES

LAST CHANGE

TOLERANCES UNLESS OTHERWISE STATED
METRIC: 1.000 = ±0.01
1.00 = ±0.1
1.0 = ±0.2
1 = ±0.4
IMPERIAL Fractional ±1/64"
Decimal ± 0.005"
ANGLES ± 0° 30'

Unless Otherwise Stated DIMENSIONS IN MILLIMETRES
REMOVE ALL BURRS & SHARP EDGES. DO NOT SCALE DRAWING
THE SURFACE TEXTURE ROUGHNESS NUMBER OF MACHINED SURFACES SHOULD BE EQUAL TO OR LESS THAN 0.8um (N6 CLA32)

REV.	A	
NOTE		
DRAWN	jcharnley	
APP.DO.		
DATE	30-11-17	

FIRST USED ON

ORIGINAL SCALE 1:1.5
DRAWN jcharnley
APP.ENG.
DATE 02-02-17

DIGITAL PROJECTION
MIDDLETON M24 1XX

TITLE
LENS, 2.90-4.34:1 ZOOM HB (G400)

COMPONENT OR DRG.No.
110-806

A2:SHEET 1 OF 1